Conceptual Design and Aerodynamic Analysis of a Hybrid VTOL UAV for Long-Endurance Payload Delivery

Submitted by-:
Smit Panchal
12303271

ABSTRACT

This report presents the conceptual design and preliminary analysis of a hybrid Vertical Take-Off and Landing (VTOL) Unmanned Aerial Vehicle (UAV) intended for transportation of time-sensitive payloads in remote and infrastructure-limited environments. The UAV is designed to carry a payload of 3–5 kg over a range of up to 100 km while maintaining high operational flexibility, energy efficiency, and autonomous capability.

A hybrid VTOL configuration is selected to combine the advantages of vertical lift for take-off and landing with efficient fixed-wing cruise performance. The design process follows a systematic conceptual design methodology based on the approach proposed by Daniel Raymer. Key design parameters such as weight estimation, thrust requirements, power loading, and tail sizing are determined analytically. The design is further validated through aerodynamic analysis (CFD).

1. Introduction

Unmanned Aerial Vehicles (UAVs) have become essential in applications such as surveillance, logistics, agriculture, and disaster response. Based on configuration and flight mechanics, UAVs are broadly classified into:

1.1 Types of UAVs

1. Fixed-Wing UAVs

- High aerodynamic efficiency
- Long endurance and range
- Require runway or launch systems

2. Rotary-Wing UAVs (Multirotors)

- Vertical take-off and landing capability
- Excellent maneuverability
- Limited endurance due to high power consumption

3. Hybrid VTOL UAVs

- Combine vertical lift and fixed-wing cruise
- Capable of operating in confined areas
- Offer improved range compared to multirotors

3. Problem Statement

The objective is to design a UAV capable of:

- Carrying 3–5 kg payload
- Operating over ~100 km range
- Functioning in remote or infrastructure-limited environments
- Ensuring high reliability and energy efficiency

Why VTOL?

- Eliminates need for runway → critical in remote areas
- Enables deployment in constrained environments
- Improves mission flexibility

Why Hybrid VTOL Configuration?

Pure multirotors are inefficient for long-range missions, while fixed-wing UAVs lack operational flexibility. A hybrid VTOL system provides:

- Efficient cruise (wing-borne lift reduces power demand)
- Vertical take-off capability
- Better endurance compared to multirotors

Why Twin Boom + Pusher Configuration?

- Allows unobstructed airflow for rear propeller
- Provides structural support for tail
- Facilitates payload placement near CG
- Improves stability and control

3. METHODOLOGY

Approach

The UAV is designed using a conceptual design methodology based on Daniel Raymer. The design follows a sequential and constraint-based approach, where primary parameters such as weight, wing loading, and thrust requirements are determined from mission requirements.

The procedure adopted is as follows:

1. Estimation of Maximum Take-Off Weight (MTOW) using component build-up method
2. Determination of thrust requirement based on VTOL condition
3. Wing sizing based on stall speed constraint
4. Determination of geometric parameters (span, chord, aspect ratio)
5. Tail sizing using volume coefficient method
6. Estimation of cruise performance and Reynolds number

All calculations were implemented using a Python-based parametric tool to ensure consistency and enable rapid iteration.

WEIGHT AND THRUST ESTIMATION

The MTOW is estimated using a component build-up approach, where known subsystem weights are summed and adjusted using a structural weight fraction. Thrust is determined based on a thrust-to-weight ratio of 2 to ensure safe hover and control during VTOL operation.

Component Category	Notation	Design Value (kg)	% of MTOW
Payload Capacity	W_payload	5.00	28.4%
Energy Source (Battery)	W_batt	4.00	22.8%
Structure & Airframe	W_struct	5.98	34.0%

Propulsion System	W_prop	1.10	6.3%
Avionics & Electronics	W_sys	1.50	8.5%
Maximum Take-Off Weight	**MTOW**	**17.58**	**100%**

Thrust Requirements

Design Parameter	Notation	Unit	Value
Total Weight (Force)	**W**	**N**	**172.42**
Thrust-to-Weight Ratio	**T/W**	**-**	**2.0**
Total Thrust Required	**T_req**	**N**	**344.84**
Number of Motors	**N**	**-**	**5**
Thrust per Motor	**T_motor**	**N**	**68.97**

WING SIZING

The wing is sized based on the stall speed constraint to ensure adequate lift generation during low-speed flight and VTOL transition. Wing loading is determined from the lift equation at stall condition, and the wing area is calculated from the estimated weight.

Geometric parameters such as wingspan, chord distribution, and mean aerodynamic chord are obtained using the selected aspect ratio and taper ratio. Cruise velocity is determined from lift equilibrium, and Reynolds number is evaluated to ensure suitability of airfoil selection.

A relatively low wing loading is obtained, which improves low-speed performance and transition stability.

Design Parameter	Symbol	Unit	Value
Design Mass	m	kg	17.00
Total Weight	W	N	166.77
Stall Velocity	V_stall	m/s	14.00
Max Lift Coefficient	C_L_max	-	1.4
Wing Loading	W/S	N/m^2	168.07
Wing Area	S	m^2	0.992

Aspect Ratio	AR	-	8.2
Wingspan	b	m	2.85
Taper Ratio	λ	-	0.45
Root Chord	c_root	m	0.480
Tip Chord	c_tip	m	0.216
Mean Aerodynamic Chord	MAC	m	0.365
Cruise Lift Coefficient	C_L	-	0.6
Cruise Velocity	V_cruise	m/s	21.39
Reynolds Number	Re	-	5.28×10^5

TAIL SIZING

The tail surfaces are sized using the volume coefficient method to ensure adequate longitudinal and directional stability. The horizontal tail volume coefficient governs pitch stability, while the vertical tail volume coefficient governs yaw stability.

The updated wing geometry is used to maintain consistency in design. A twin-boom configuration is adopted, resulting in two vertical stabilizers. Tail geometry is determined using selected aspect ratios, and control surface dimensions are estimated as a fraction of tail chord.

Horizontal Tail

Parameter	Value
Wing Area (Sw)	0.992 m2
Mean Chord (c)	0.365 m
Tail Arm (lt)	0.95 m
Volume Coefficient (Vh)	0.6
Horizontal Tail Area (Sh)	0.229 m2
Aspect Ratio (ARh)	4.0
Span (bh)	0.958 m

Chord (ch)	0.239 m

Vertical Tail

Parameter	Value
Wing Area (Sw)	**0.992 m²**
Wingspan (b)	**2.85 m**
Tail Arm (lt)	**0.95 m**
Volume Coefficient (Vv)	**0.05**
Total Vertical Tail Area (Sv)	**0.149 m²**
Configuration	**Twin Tail**
Area per Tail	**0.074 m²**

Aspect Ratio (ARv)	**1.5**
Height (bv)	**0.334 m**
Chord (cv)	**0.222 m**

Control Surfaces

Surface	Range
Elevator Chord	**0.060 – 0.072 m**
Rudder Chord	**0.067 – 0.089 m**

FUSELAGE SIZING, CG AND STABILITY ANALYSIS

Design Approach

The fuselage is designed based on payload integration, propulsion layout, and stability requirements. The length is governed by the required tail moment arm, while internal layout is optimized to achieve the desired center of gravity (CG).

A mass–moment balance approach is used to determine CG location, and stability is assessed using static margin and neutral point estimation, following conceptual design practices from Daniel Raymer.

Fuselage Length Determination

The fuselage length is defined by the tail arm requirement:

$$Lfus \approx xLE + lt$$

Parameter	Value
Wing LE location (x_LE)	0.40 m
Tail Arm (lt)	1.00 m
Fuselage Length	1.40 m

Design Insight

- Length is driven by stability (tail arm) and payload packaging
- Ensures sufficient moment arm for tail effectiveness

Mean Aerodynamic Chord (MAC)

Parameter	Value
Root Chord	0.416 m
Tip Chord	0.163 m
Taper Ratio	0.39
MAC	0.30 m

Target CG Location

For stable aircraft:

Parameter	Value
CG Location Formula	xCG = xLE + (0.25 – 0.35) * MAC
CG Range (xCG)	0.475 – 0.505 m

Mass Distribution

Component	Mass (kg)	Position (mm)
Payload	5.0	400
Avionics	1.5	450
Structure	5.9	8490
Propulsion	1.1	1400
Battery	4.0	Variable

CG Calculation ($X_{cg} = \sum(m_i x_i) / \sum m_i$)

Parameter	Value
Total Mass	17.576 kg
Fixed Moment	7145 kg·mm
Battery Position	~370 mm from nose
Final CG	490 mm

CG Shift Analysis

Condition	CG	Observation
With Payload	490 mm	Stable
Without Payload	526 mm	Aft shift

Interpretation

- CG shifts rearward by ~36 mm
- Reduces stability margin
- Must be accounted for in operation/design

At the conceptual design stage, the center of gravity (CG) and stability characteristics are estimated based on assumed mass distribution and geometric parameters. These estimates are used primarily for **layout validation and component placement**.

A preliminary neutral point and static margin can be estimated using standard relations; however, these values are subject to change after aerodynamic and structural refinement.

Preliminary Observation

- The CG is positioned at approximately **30% of MAC**, which lies within the typical stable range for conventional aircraft configurations
- Tail volume coefficients are selected to ensure **adequate stability margins**

The current CG and stability assessment are preliminary and intended for conceptual design validation only.

Final CG location, neutral point, and static margin will be determined after:

- Detailed aerodynamic analysis (CFD)
- Structural design and weight distribution refinement
- Final component integration

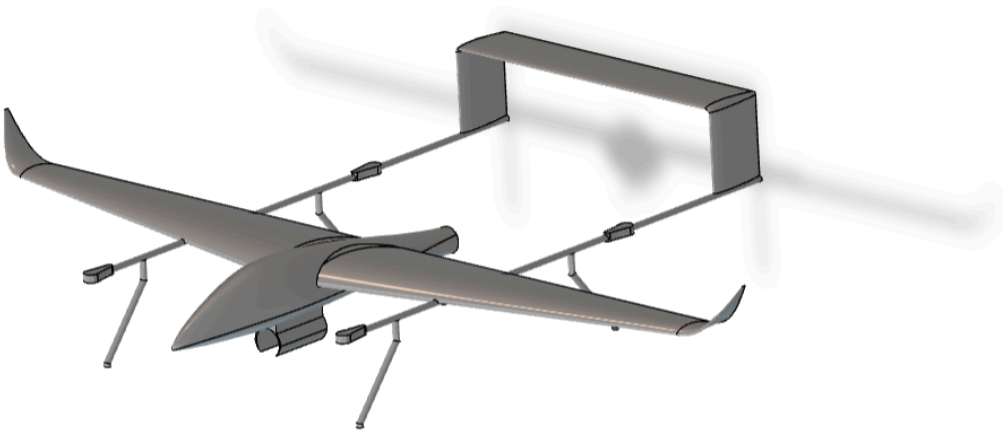

4. CFD ANALYSIS AND AERODYNAMIC VALIDATION

Objective

The Computational Fluid Dynamics (CFD) analysis is performed to evaluate the aerodynamic performance of the UAV, specifically:

- Lift generation capability
- Drag characteristics
- Flow behavior over wing and fuselage
- Validation of conceptual design assumptions

Geometry Used for Analysis

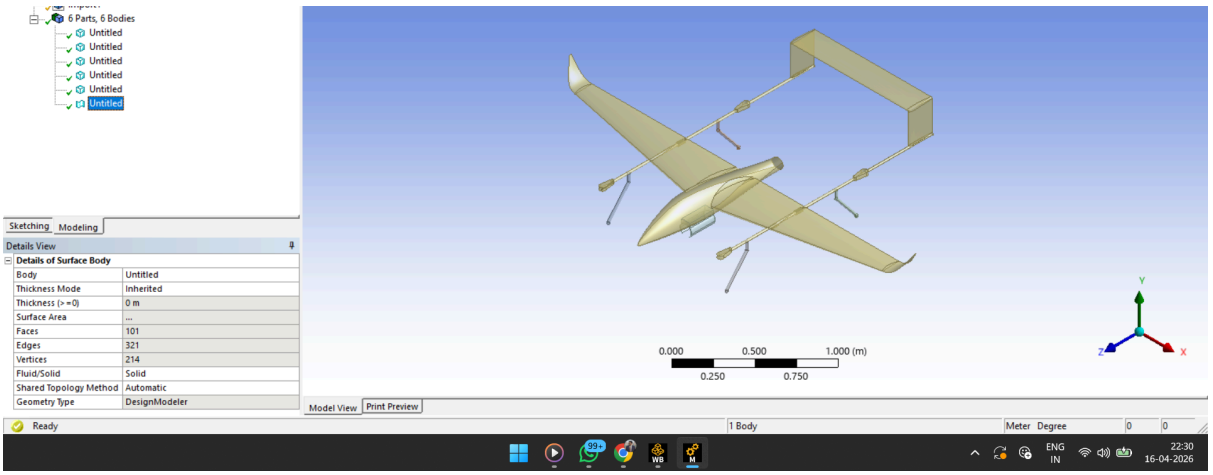

The CFD model consists of:

- Wing (main lifting surface)
- Fuselage
- Twin boom tail configuration
- Horizontal and vertical stabilizers

Small geometric details were simplified to reduce computational cost while preserving aerodynamic characteristics.

Computational Domain

The domain is designed to minimize boundary interference effects and ensure accurate flow development.

ASSUMPTIONS

Parameter	Value
Inlet distance	~5–7 chord lengths
Outlet distance	~10–15 chord lengths
Lateral boundaries	≥ 5 chord lengths
Flow type	External, incompressible

Mesh Generation

Approach

- Unstructured tetrahedral mesh used
- Local refinement near:
    - Wing leading edge
    - Trailing edge
    - Fuselage
- Boundary layer resolved using inflation layers

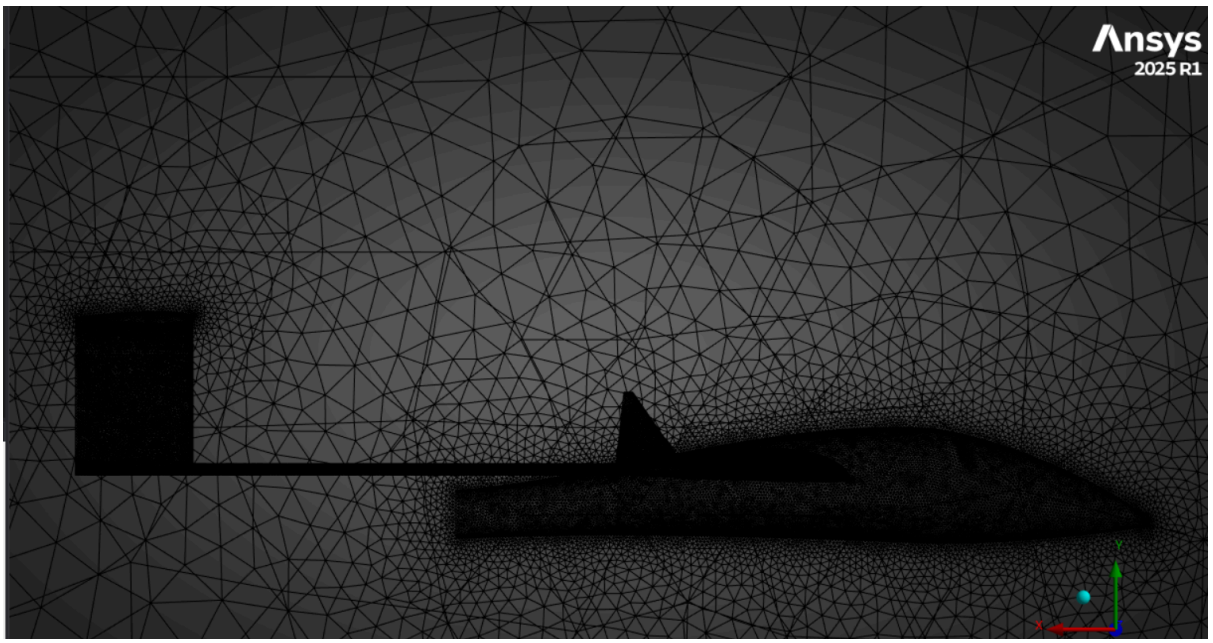

Boundary Layer Resolution

First layer height calculation:

Parameter	Value
Reynolds Number	5.14 x 10^5
Skin Friction Coefficient	0.00397
Wall Shear Stress	1.52 Pa
Friction Velocity	1.11 m/s

First Layer Height	**0.013 mm**
Target (y+)	**~1**

Interpretation

- y+≈1 → resolves viscous sublayer
- Suitable for k-ω SST model
- High-quality boundary layer capture

Solver Setup

Parameter	**Value**
Software	ANSYS Fluent
Solver Type	Pressure-based
Flow	Steady
Regime	Incompressible

Turbulence Model	K-omega SST
Velocity (Inlet)	25 m/s
Reynolds Number	~5 x 10^5

Why k-ω SST?

- Better near-wall prediction
- Handles adverse pressure gradients
- Suitable for low Reynolds UAV flows

Boundary Conditions

Boundary	Type
Inlet	Velocity inlet (25 m/s)
Outlet	Pressure outlet
Walls	No-slip condition
Far-field	Symmetry / pressure far-field

Results

Pressure Distribution

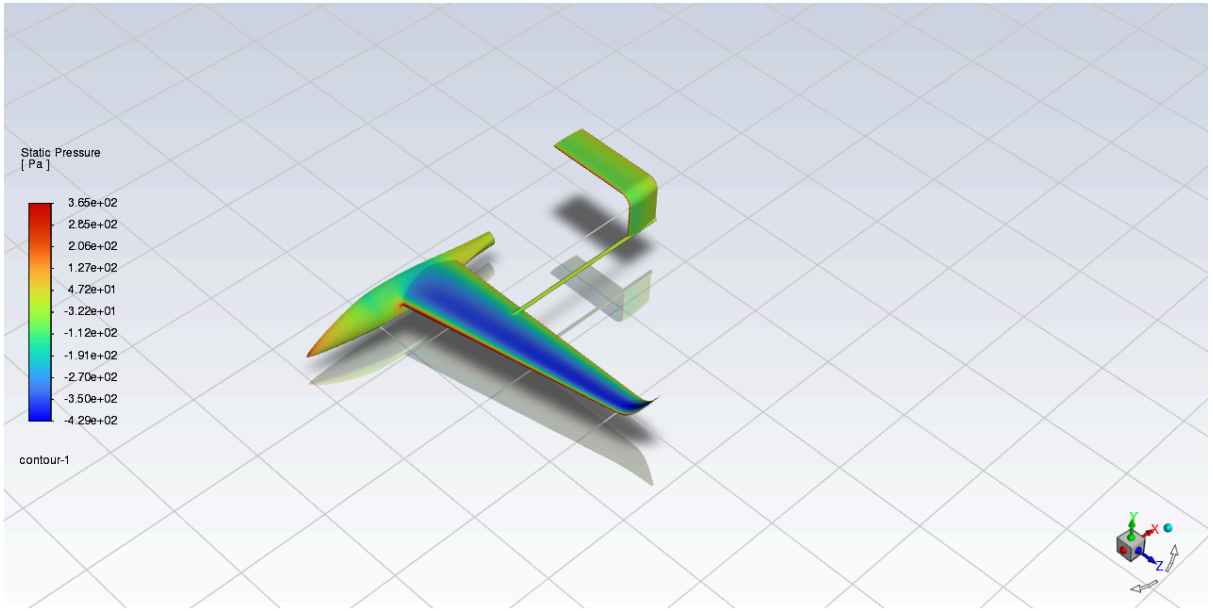

Observation:

- High pressure on lower surface
- Low pressure (suction) on upper surface
- Strong lift generation confirmed.

Parameter	Value
Lift (L)	200 N
Drag (D)	11 N
Lift-to-Drag Ratio (L/D)	18.18

5. CONCLUSION

The present work focused on the conceptual design and aerodynamic evaluation of a hybrid VTOL UAV intended for long-endurance payload delivery in infrastructure-limited environments. The design process followed a structured methodology based on established aircraft design principles, ensuring logical progression from mission requirements to aerodynamic validation.

The UAV configuration, consisting of a high-aspect-ratio wing, twin-boom tail, and pusher propulsion system, was selected to balance vertical take-off capability with efficient forward flight. Weight estimation and thrust sizing confirmed the feasibility of VTOL operation, while wing sizing based on stall constraints resulted in a low wing loading configuration, enhancing low-speed performance and transition stability.

CFD analysis provided validation of the aerodynamic design. The results indicated that the UAV is capable of generating sufficient lift (≈200 N) to sustain flight at the design condition, exceeding the estimated weight (~170 N). The computed drag (~11 N) remains within acceptable limits for this class of UAV.

Aerodynamic Efficiency Assessment

The aerodynamic efficiency of the UAV, defined by the lift-to-drag ratio **L/D ≈ 18**, is a key outcome of this study.The designed UAV achieves an aerodynamic efficiency comparable to fixed-wing aircraft and significantly higher than typical VTOL systems.

Aircraft Type	Typical L/D
Multirotor UAV	3–6
VTOL Hybrid UAV	8–15
Fixed-wing UAV	12–20
Gliders	30+

Reasons for High Aerodynamic Efficiency

The favorable aerodynamic performance can be attributed to the following design choices:

1. Wing Design

- Aspect ratio ≈ 8.2 reduces induced drag
- Large wing area lowers wing loading
- Operation at moderate lift coefficient ensures efficient lift generation

2. Low Reynolds Number Optimization

- Operating at Re~5×105Re \sim 5 \times 10^5Re~5×105, suitable for small UAVs
- Airfoil and sizing aligned with low-speed aerodynamic behavior
- Avoidance of excessive drag rise

3. Configuration Selection

- Twin boom layout minimizes interference effects
- Pusher configuration ensures clean flow over the wing
- High-wing arrangement improves aerodynamic stability

4. CFD Flow Characteristics

- Smooth pressure distribution observed
- No significant flow separation detected
- Efficient lift generation across the wing span

Engineering Significance

- High aerodynamic efficiency directly contributes to **increased endurance**
- Reduced drag leads to **lower power consumption in cruise**
- The design demonstrates strong potential for **long-range UAV operations**

Limitations and Realistic Considerations

While the CFD results indicate strong aerodynamic performance, the obtained efficiency is expected to be slightly optimistic due to modeling simplifications.

“The aerodynamic efficiency obtained from CFD is considered optimistic, as propeller effects, transition modeling, and structural surface roughness are not included in the present analysis.”

Key limitations include:

- Absence of **propeller–flow interaction**
- No transition modeling (laminar to turbulent)
- **Idealized surface conditions** and **Lack of full-system drag contributions**

FUTURE SCOPE

The present work establishes a conceptual design and preliminary aerodynamic validation of the hybrid VTOL UAV. Further refinement is required to enhance accuracy and enable practical implementation.

Future work will focus on incorporating propulsion–airframe interaction, including propeller wake effects and evaluation of VTOL efficiency through figure of merit analysis. Detailed flow-field studies will be conducted to analyze circulation distribution, vortex formation, and wake behavior for improved aerodynamic understanding.

Advanced aerodynamic investigations will include transition modeling, mesh independence studies, and drag breakdown, enabling more accurate performance prediction. A comprehensive flight performance analysis will be carried out, including power required, endurance, range, and climb characteristics.

Further, a complete flight mechanics and stability analysis will be performed, involving refined neutral point estimation, static margin evaluation, and dynamic stability modes. Basic control system modeling, particularly for pitch dynamics and elevator deflection, will also be developed to support controllability and future autopilot integration.